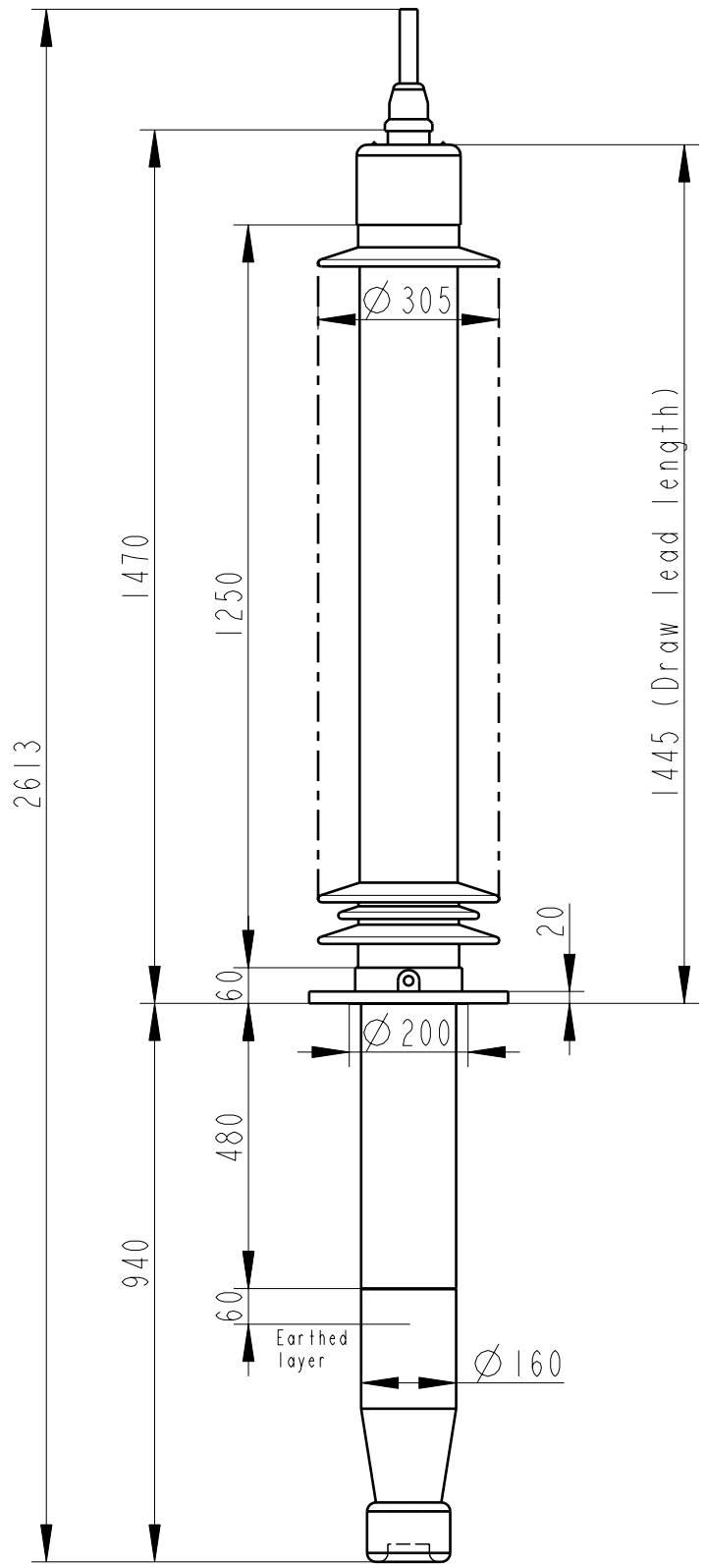

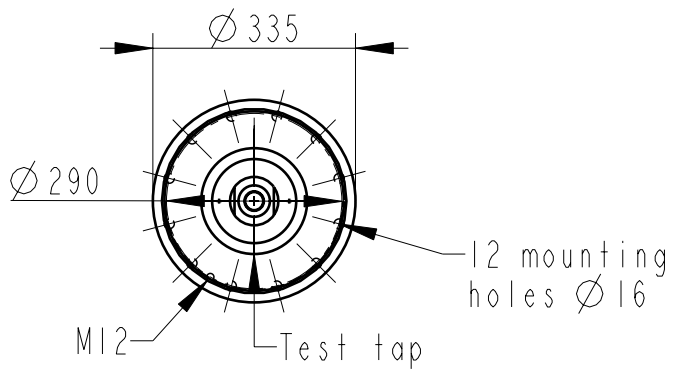

OUTER TERMINAL

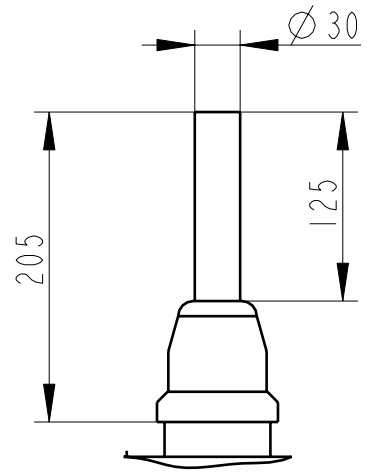

INNER TERMINAL FOR STRANDED CABLE

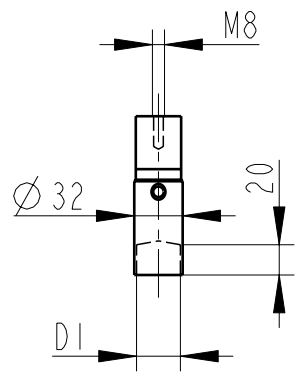

END SHIELD

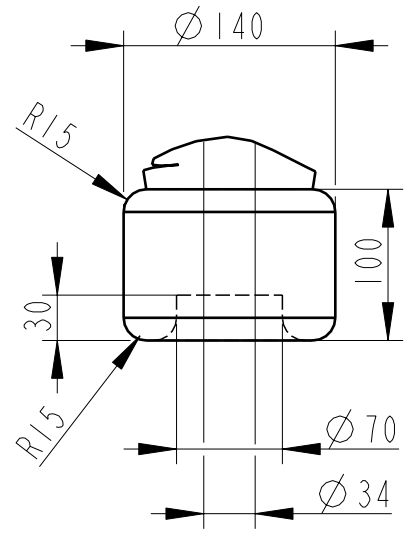

SOLID ROD CONNECTOR

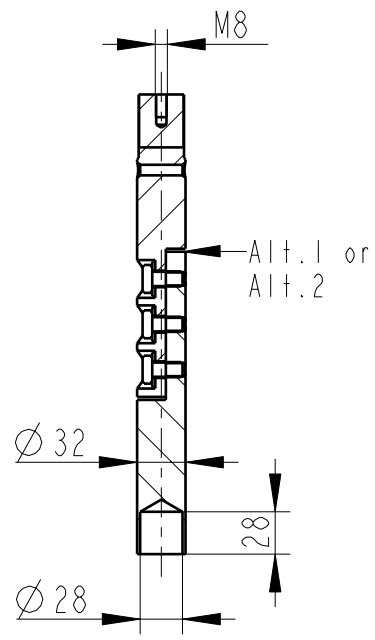

The solid rod can be divided either:
Alt.1: 20mm below the bushing flange or
Alt.2: 20mm below the upper end of the bottom porcelain

Bushing Data:

Rated Voltage	170	kV
Phase to Ground Voltage	145	kV
Dry Lightning Impulse 1,2/50µs	650	kV
Wet power frequency AC	275	kV
Routine test 1min dry 50Hz	300	kV
Rated Current	1250	A
Creepage Distance	4080±110	mm
Creepage Distance Protected	1620	mm
Mass	126	kg

Ordering Data:

BUSHING — COLOUR AIR INSULATOR

LF123113-K — BROWN

-L — LIGHT GREY

OUTER TERMINAL

LF 170 002-B — Cu, Ø30, L=125

LF 170 001-B — Al, Ø30, L=125

OTHER TYPES ON REQUEST

INNER TERMINAL FOR STRANDED CABLE

For brazing	Conductor area	DI
LF 170 011-T	up to 285mm²	Ø29
LF 170 011-V	Undrilled with pilot hole Ø5	

SOLID ROD CONNECTOR

LF 170 052 -L for Alt.1

LF 170 052 -H for Alt.2

ABB Components Ludvika, Sweden

No.
Ur/Uy kV Ir A 50/60 Hz
LI / SI / AC kV
M kg L mm V
C1 pF Tan δ %
C2 pF Tan δ %

Based on	Reg. No.	Title: GOB 650-1250-0.5 WITHOUT OIL LEVEL GAUGE SHORT END SHIELD	
Prepared: Lövnord	Responsible department: COM/BK		Language
Approved: Johansson	Take over department		
Design engineering review: Hedlund	Database		Page 1(1)
ABB Components		Document No. 2751369-161	

We reserve all rights in this document and in the information contained therein. Reproduction, use or disclosure to third parties without express authority is strictly forbidden. ©ABB